CEPU1500 / EPU-1500 — electronic dimmer (TRIAC)

This guide describes the installation and use of the CEPU1500 dimmer. Follow the recommendations to ensure safe and efficient operation. Installation must be carried out by an authorised electrician in accordance with applicable regulations.



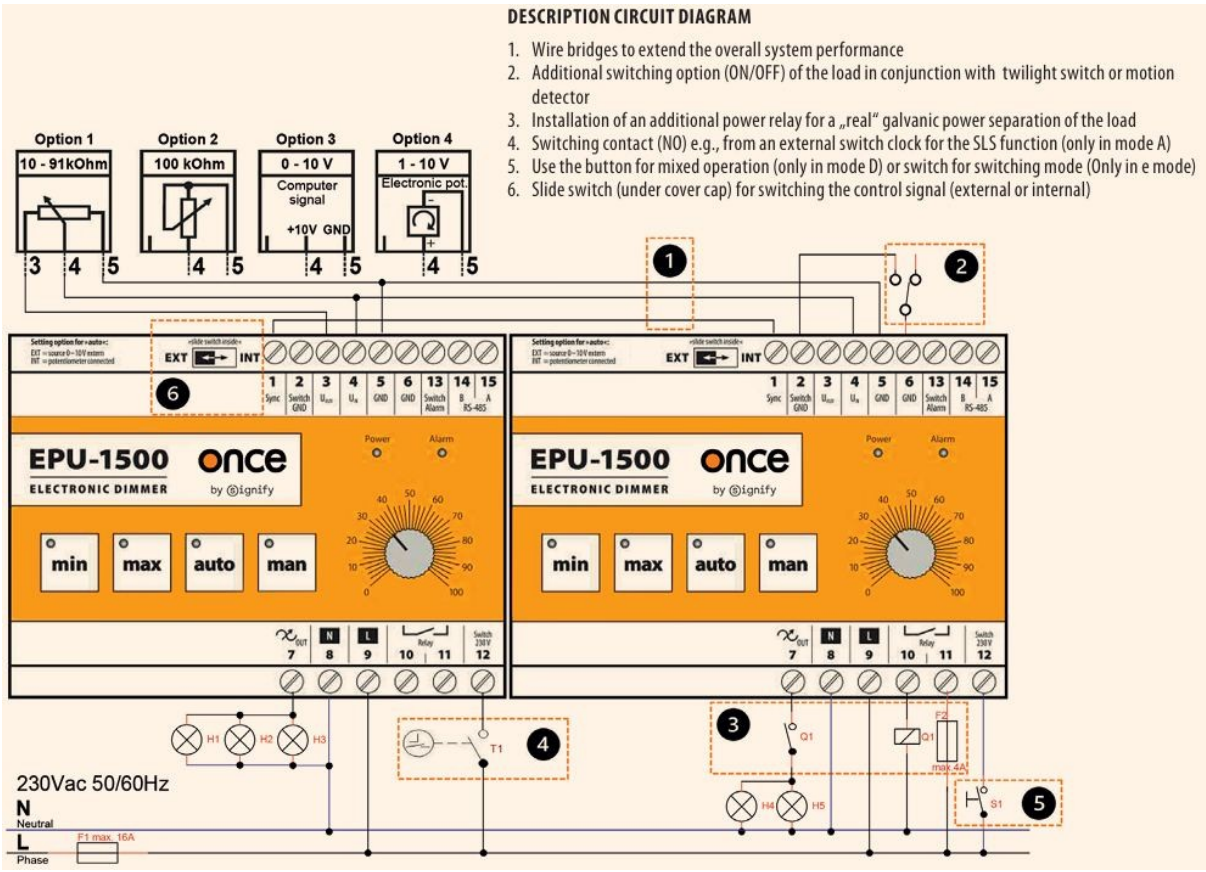

Safety and important notes

> **IMPORTANT**
> Avoid interference from, among other things, EMC (electronic noise) and frequency converters from other installations, etc.
> Remember to use a shielded cable for the 0-10V control cable (e.g. F0103S) and to “ground” the shield at one end.
> We recommend that the CEPU1500 is mounted separately in the distribution board.
> It is recommended to install the unit on a DIN rail with a 1-module gap to any other units.

Temperature effects

The permissible load is reduced when the ambient temperature exceeds +45 °C. Ensure sufficient airflow so that the specified ambient temperature parameters are maintained.

Connection and circuit

Input options for control signal (terminal 4 + 5)

- **Option 1:** 10–91 kOhm potentiometer.
- **Option 2:** 100 kOhm potentiometer.
- **Option 3:** 0–10 V computer signal (+10V / GND).
- **Option 4:** 1–10 V electronic potentiometer.

Below are two typical connections, shown as simplified wiring diagrams.

Alternative 1: Connection – 0-10V signal from external lighting control or barn computer

A 0-10V signal from an external lighting control or barn computer is connected to terminal 4 (signal) and terminal 5 (GND). The 230V supply is connected to terminal 8 (N) and 9 (L), and the dimmed output to the LED fixtures is taken from terminal 7.

Connection: 0–10 V signal from external control

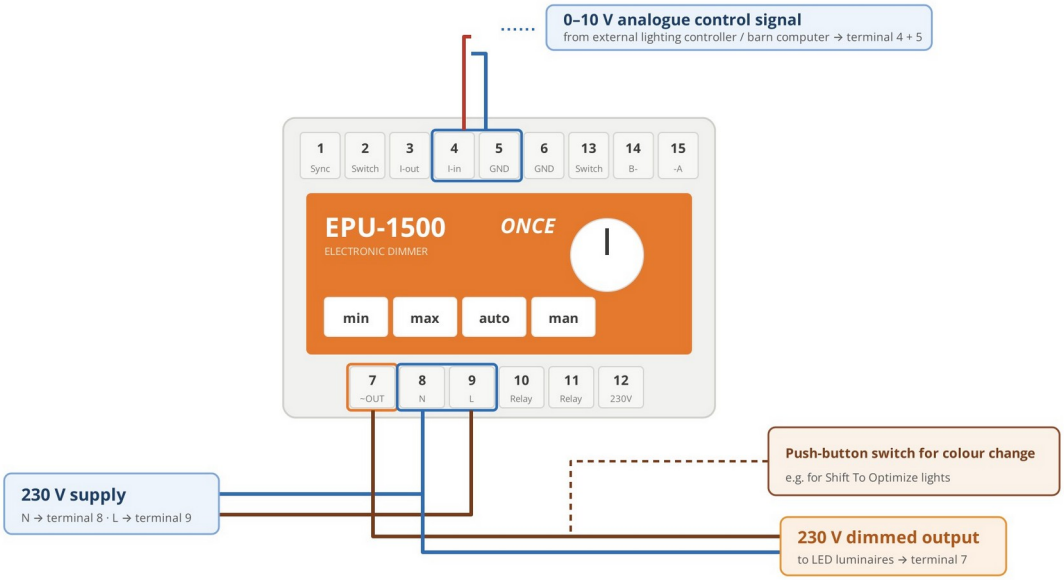

Alternative 2: Connection – signal from analogue timer (e.g. Orbis)

When controlled via an analogue timer, both the CEPU1500 and the timer are supplied with 230V from the input terminal block. The timer's switched 230V output is fed to terminal 12 (push input), and the dimmed output is fed via the output terminal block (triac) on to the LED fixtures.

Connection – signal from analogue timer (e.g. Orbis)

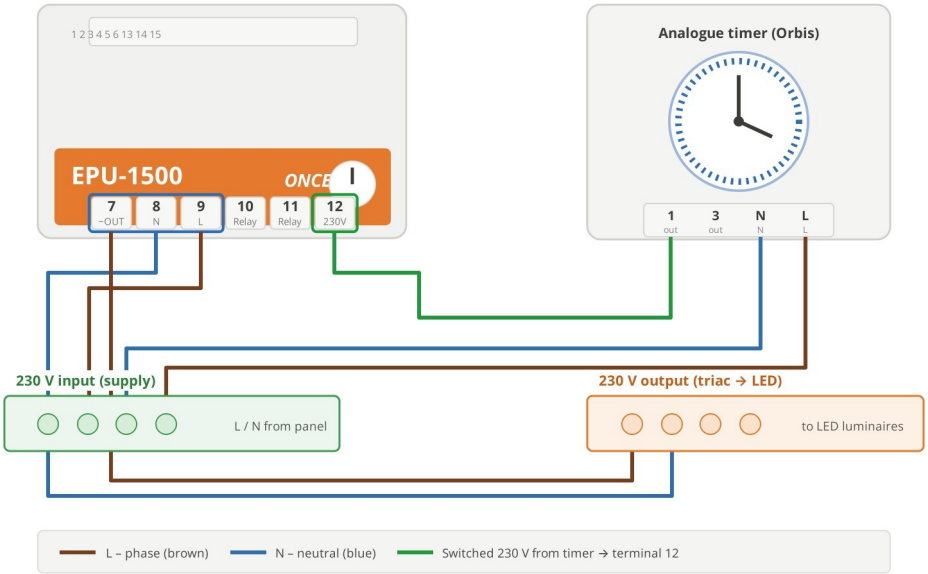

Operating modes

- **man** – Manual adjustment of the output via the rotary knob.
- **auto** – Via an external 0-10V analogue computer signal, connected potentiometer, or 230V timer signal in SLS mode.
- The lamp shows the selected operating mode: **flashing** = standby, **steady light** = active.

Setting the operating mode (follow the sequence)

Mode A – Standard for RN Solutions products (factory setting): Hold **min** + **max** pressed simultaneously for 3 sec. → beep.

Mode B – HWDKS-LED: min → **max** → **auto**, hold pressed simultaneously for 3 sec. → beep.

Mode C – HWDKS-11W: max → **min**, hold pressed simultaneously for 3 sec. → beep.

Mode D – Mixed operation: (light recipe for multi-channel fixtures, freely adjustable, dimmable 0-100 %) — **max** → **auto**, hold pressed simultaneously for 18 sec. → beep. Permanent light = active.

Mode E – Switching mode: (colour channel switching for multi-channel fixtures, dimmable 0-100 %) — **min** → **man**, hold pressed simultaneously for 18 sec. → beep. Permanent flashing = active.

Setting the desired light recipe (mixed operation)

Mode D "Mixed operation" must be activated. **Terminal 12 = 230V** → adjust → **terminal 12 = 0V** = colour is set, dimmable 0-100 %.

Switching colour channel (switching mode)

Mode E "Switching mode" must be activated.

- **Terminal 12 = 0V** → colour channel 1, 0-100 % dimmable.
- **Terminal 12 = 230V** → colour channel 2, 0-100 % dimmable.

Adjusting brightness levels – min/max.

Raise MIN level: click **man** → hold **min** pressed for 3 sec. (beep) → adjust (0–45 %) → click **min** (saved).

Lower MAX level: click **man** → hold **max** pressed for 3 sec. (beep) → adjust (55–100 %) → click **max** (saved).

Switching the dimming principle (only possible in Mode A)

- Status line: press **man** or **auto** — 1 flash = trailing-edge, 3 flashes = leading-edge.
- Switch: hold **man** pressed for 18 sec. → beep.

Resetting the unit to factory settings

Hold **min** + **max** + **auto** + **man** pressed simultaneously for 10 sec. → beep and flash.

SLS sunlight simulation (only possible in Mode A)

With an external timer you can create an artificial sunrise (15 min.) and an artificial sunset (30 min.) – fixed times.

- Activate / deactivate SLS: hold **auto** pressed for 18 sec. → 3 beeps = activated, 1 beep = deactivated.
- Sunrise: signal on terminal 12 (230 VAC 50/60 Hz), sunrise over 15 min.

- Sunset: signal on terminal 12 (230 VAC 50/60 Hz), sunset over 30 min.

Technical specifications

Electrical data

Nominal power	1500 VA max.
Input voltage	230 VAC
Frequency	50 / 60 Hz
Power consumption	3.3 W
Output	230 VAC 50 / 60 Hz
Tolerance, power consumption	+/- 10 %
Fuse (max.)	16 A
Inrush current / time	28 A / 10 µs
Electrical protection	Overload, short circuit, overvoltage, undervoltage
Control interface	Analogue 0-10 VDC, remote control 10–100 kOhm or RS485 digital
Protection class	Class II
Enclosure rating	IP20

Load

Min. load	60 W min.
Incandescent bulbs	1500 W max.
Dimmable LED / energy-saving bulbs	1200 VA max.

Mechanical data

Operating temperature	-10 °C to +40 °C
Mounting	35 mm DIN rail
Dimensions (H × L × W)	90 × 60 × 105 mm
Housing / colour	Plastic / light grey
Connection	Screw terminals
Weight	0.385 kg each
Country of origin	Poland
Warranty	3 years
Approvals	CE · RoHS · CB

Note: *Terminal numbers and connections in the diagrams must always be checked against the markings on the unit itself and the manufacturer's data sheet before commissioning.*

Troubleshooting and reset

- **In case of fault – red lamp flashing:** Always test the reset function first
- **Reset:** Hold all 4 buttons (**min · max · auto · man**) pressed for 5 sec., until beeps sound

In the event of a fault, the EPU-1500 provides a visual and audible alarm. A fault is automatically acknowledged as soon as it is no longer present. The alarm tone can be stopped by pressing any button on the EPU-1500. The unit is restarted by switching the mains power off and on.

Fault	LED Power	LED Alarm	Buzzer	Alarm relay	Cause	Remedy
Undervoltage	ON	Flashing (6×/sec.)	YES	YES	Supply below 160 VAC	Check the mains voltage
Overvoltage	ON	ON	YES	YES	High voltage spikes, unacceptable voltage level, or inductive load	Check the mains voltage
Overheating	ON	Flashing (5×/sec.)	YES	YES	Temperature in the controller above 120 °C / 248 °F, or ambient temperature too high	Check cooling/ventilation
Overload	ON	Flashing (2×/sec.)	YES	YES	Load exceeds > 1700 W	Check the load connected to terminal 7
Short circuit	Flashing (1×/sec.)	Flashing (1×/sec.)	YES	YES	Short circuit on the load output (> 10 sec.)	Check output / connected consumers
Poor voltage quality	Flashing (1×/sec.)	OFF	NO	NO	Frequency outside 45-65 Hz, distorted sine wave, or power factor < 0.4	Check the mains voltage quality
Communication	Alternating flash (1×/sec.)	—	YES	NO	Internal microprocessor fault (automatically switches to rotary knob) or RS-485 communication fault	Check RS-485 or internal unit fault
Voltage dip detection	Flashing (6×/sec.)	OFF	NO	NO	Incorrect load peak relative to mains vs. rapid voltage dip (may exceed the cable impedance)	Check the mains voltage / quality
Overload alarm contact	ON	OFF	YES (2×)	NO	Current level too high on terminal 13 (> 200 mA)	Check the load connected to terminal 13

Alarm output

- **Mechanical relay:** terminal 6 + 13. K1 = 24 VDC, max. 200 mA coil current. GND +24V auxiliary supply.
- **Alarm output (PLC input):** terminal 6 + 13. 12 VDC, max. 1 mA.